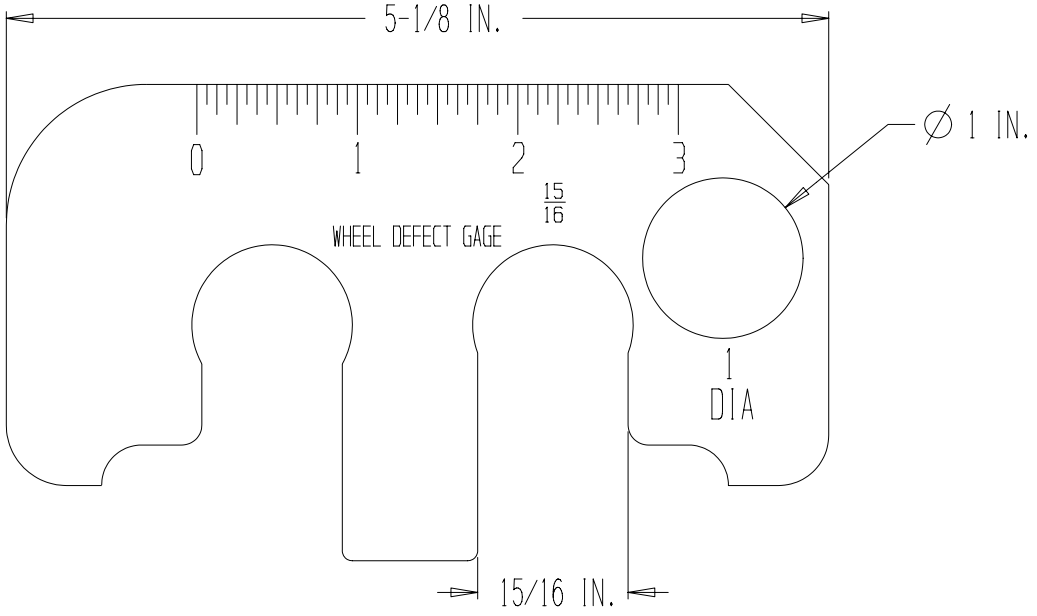
5-1/8 IN.
0
1
2
3
15/16
WHEEL DEFECT GAGE
∅ 1 IN.
1
DIA
15/16 IN.

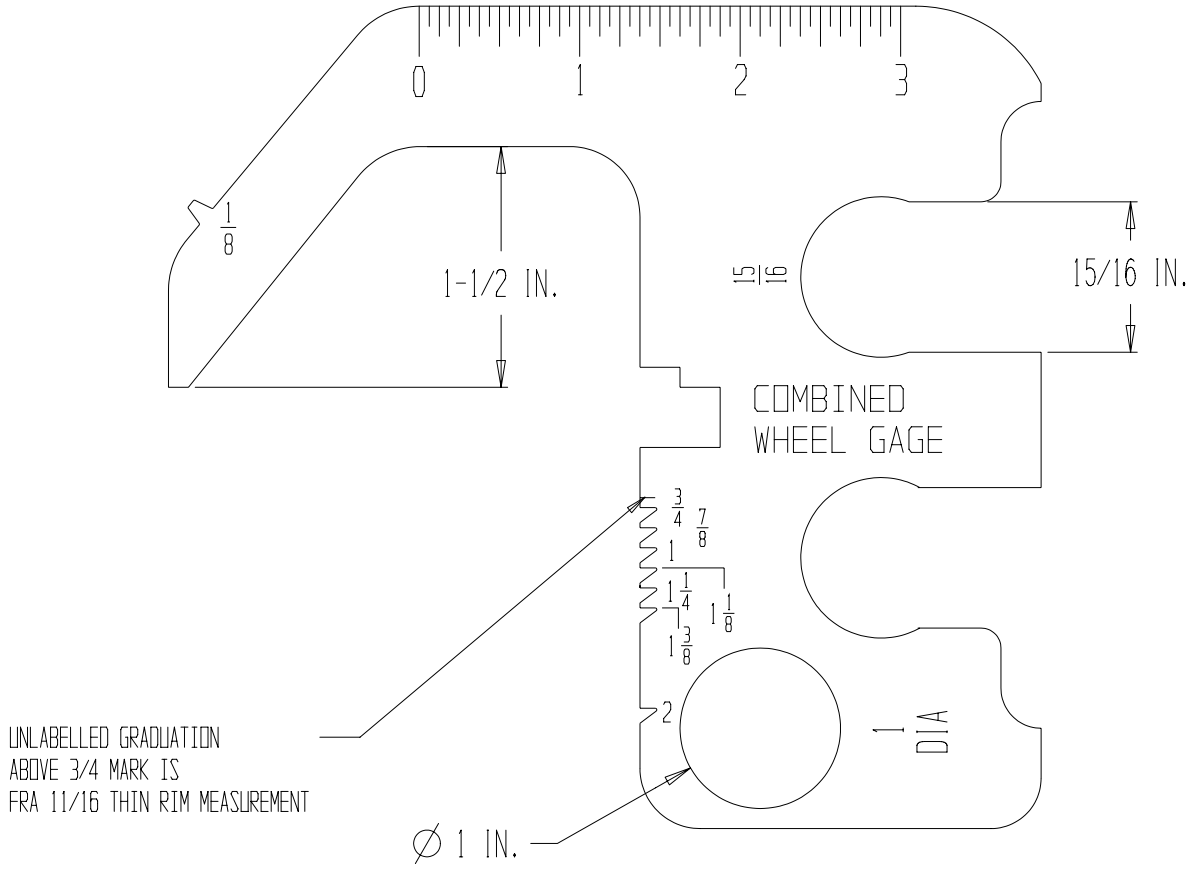
0
1
2
3
1/8
1-1/2 IN.
15/16
15/16 IN.
COMBINED
WHEEL GAGE
3/4
7/8
1
1 1/4
1 1/8
1 3/8
2
1
DIA
UNLABELLED GRADUATION
ABOVE 3/4 MARK IS
FRA 11/16 THIN RIM MEASUREMENT
∅ 1 IN.