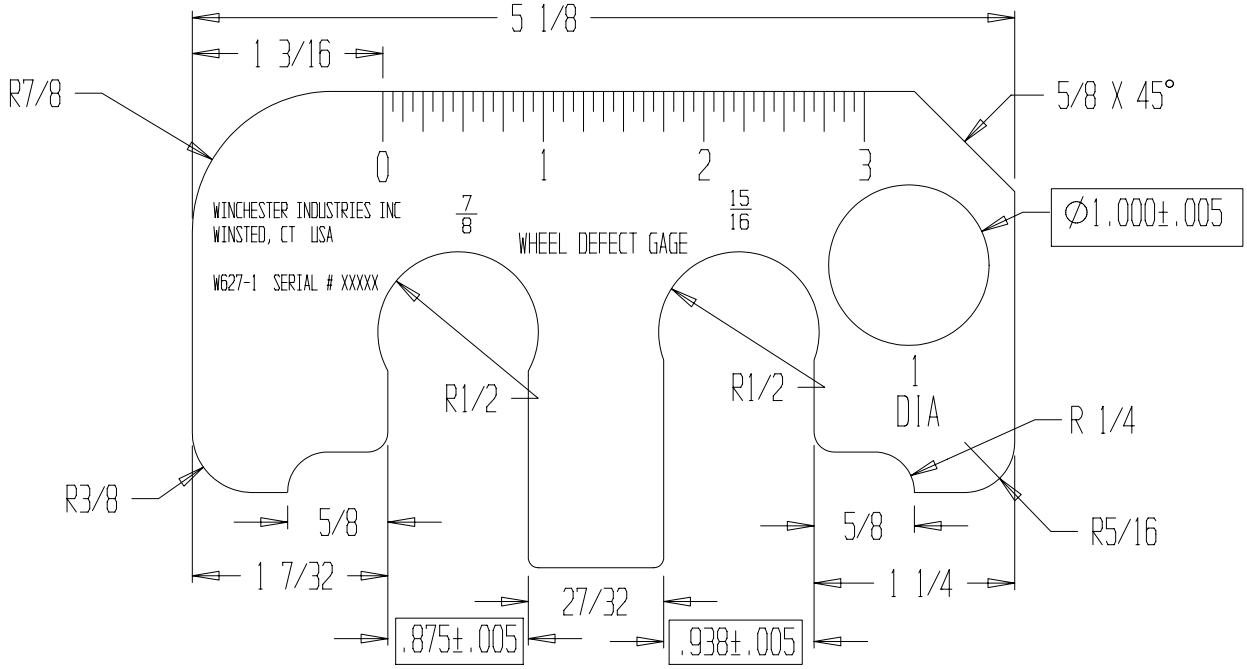

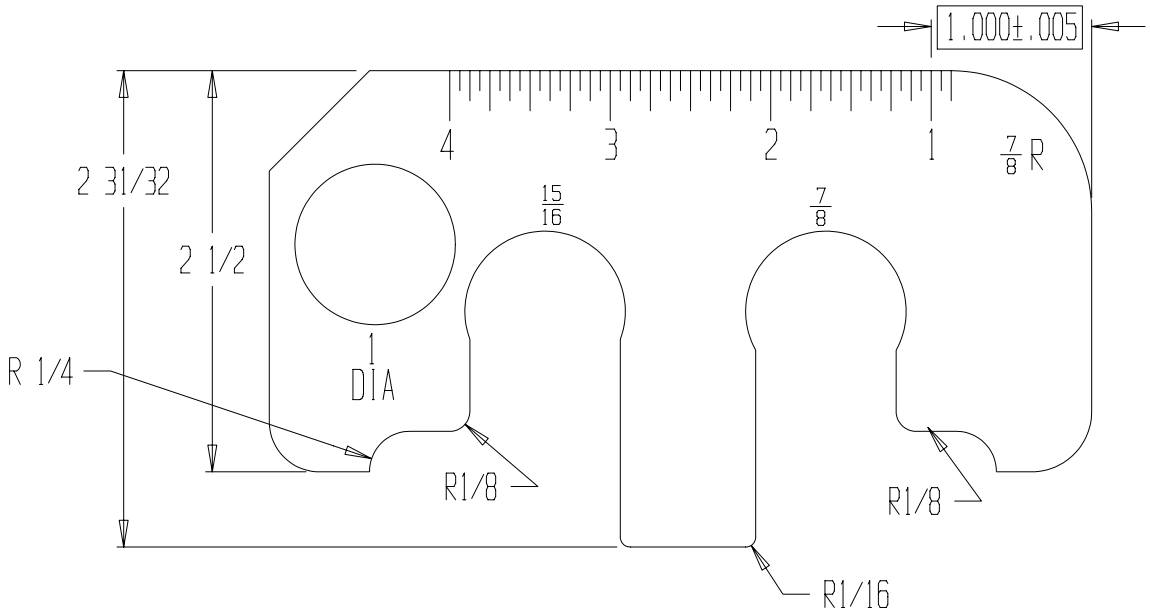

RECERTIFICATION WEAR LIMIT ALLOWANCE: .015"

MANUFACTURING TOLERANCE
UNLESS OTHERWISE SPECIFIED: +/-.010"

RECERITICATION VERIFICATION
USING MASTER GAGE W785A
AND CERTIFIED SCALE
OR
VERIFY ALL BOXED DIMENSIONS
USING CALIBRATED SCALE

Material:
304 Stainless Steel
Thickness: 3/32"

Scale: .75X

WINCHESTER INDUSTRIES INC.

WHEEL DEFECT GAGE

SIZE	Job#	DWG NO.	Disk	REV
A		W627-1		C

CUSTOMER | ENG JCD 5/31/2006