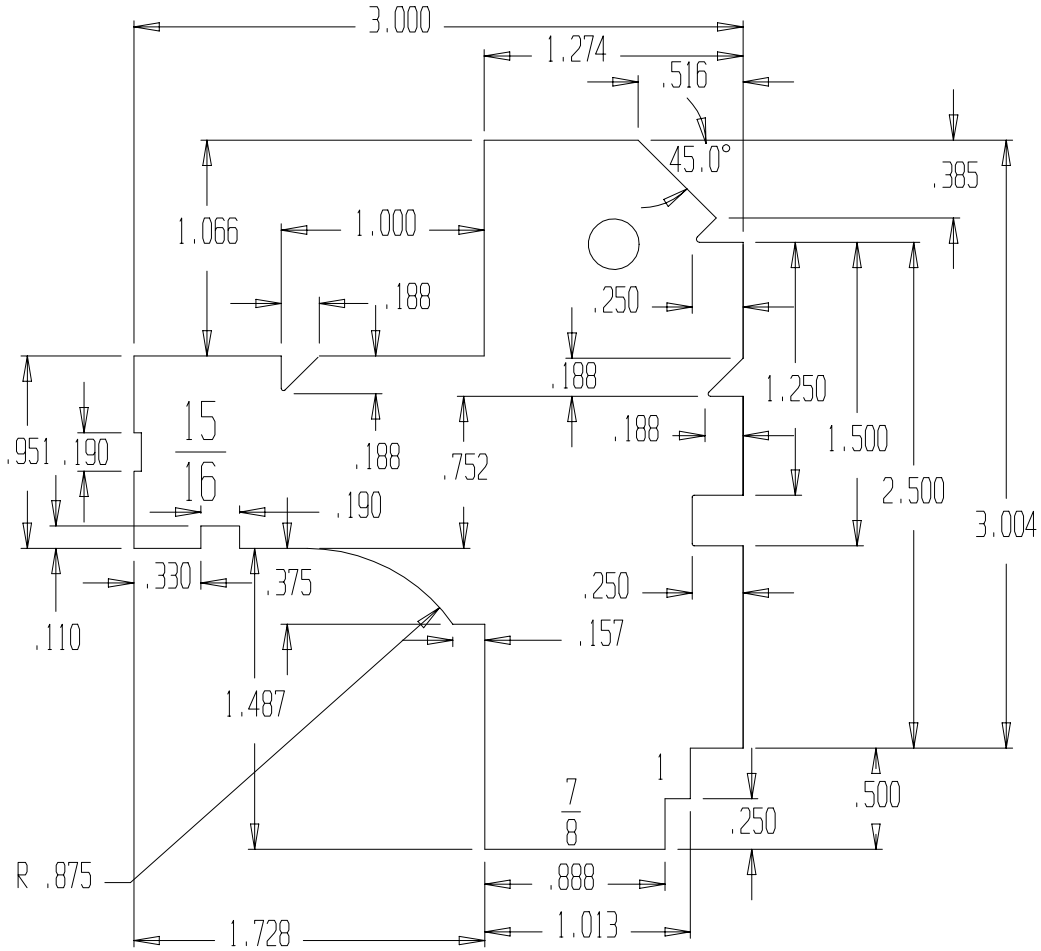

REFERENCE:
AAR STANDARD S-629-98

VERIFY USING CONTOUR MAPPING
MAXIMUM MANUFACTURE DEVIATION FROM NOMINAL: .003"
MAXIMUM RECERTIFICATION DEVIATION FROM NOMINAL: .005"

MATERIAL:
Stainless Steel 17-7
Thickness: 3/16"
Hardened

SCALE 1X

WINCHESTER INDUSTRIES INC.

MASTER GAGE FOR WHEEL GAGES

SIZE	Job#	DWG NO.	Disk	REV
A		W785A		A

CUSTOMER WINCHESTER | ENG JCD 03/24/98